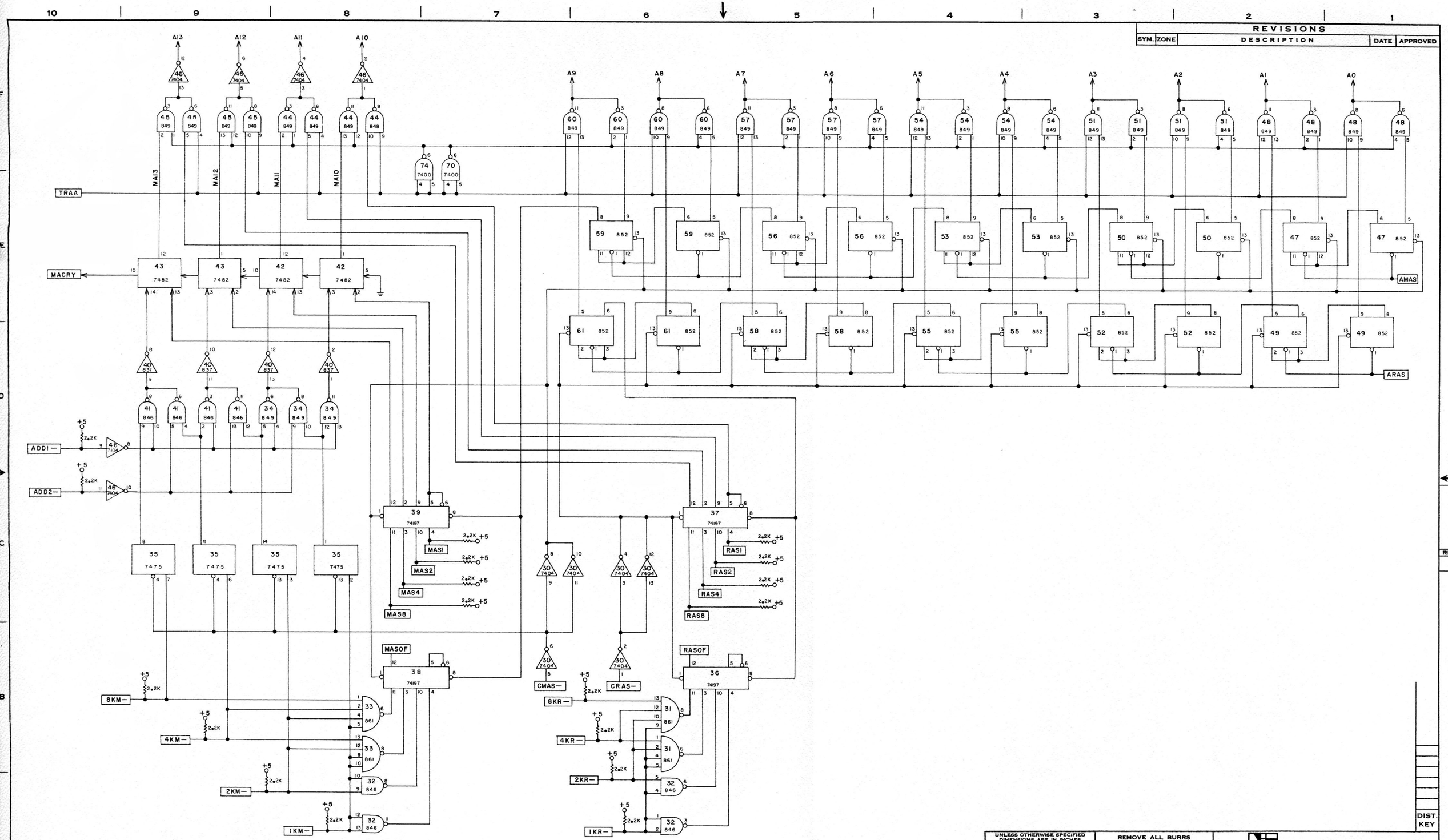

UNLESS OTHERWISE SPECIFIED DIMENSIONS ARE IN INCHES AND TOLERANCES ARE FRACTIONS ± DECIMALS ± ANGLES ±
√ INDICATES SURFACE ROUGHNESS PER MIL-STD-10

MATERIAL
SPEC.
FINISH
SPEC.

NEXT ASS'Y | USED ON
APPLICATION

REMOVE ALL BURRS
BREAK ALL SHARP CORNERS

		DATE
DRAWN	GW	
CHECKED		
APPROVED		
APPROVED		

NICOLET INSTRUMENT CORPORATION
5225 Verona Road, Madison, Wisconsin 53711

TITLE
MEASURE & READOUT ADDRESS SCALER
FOR MODELS 1081 TO 1085

CODE IDENT. NO. | SIZE D | (BOARD 2)
SCALE | SHEET 3 of 4