REVISIONS				
SYM.	ZONE	DESCRIPTION	DATE	APPROVED

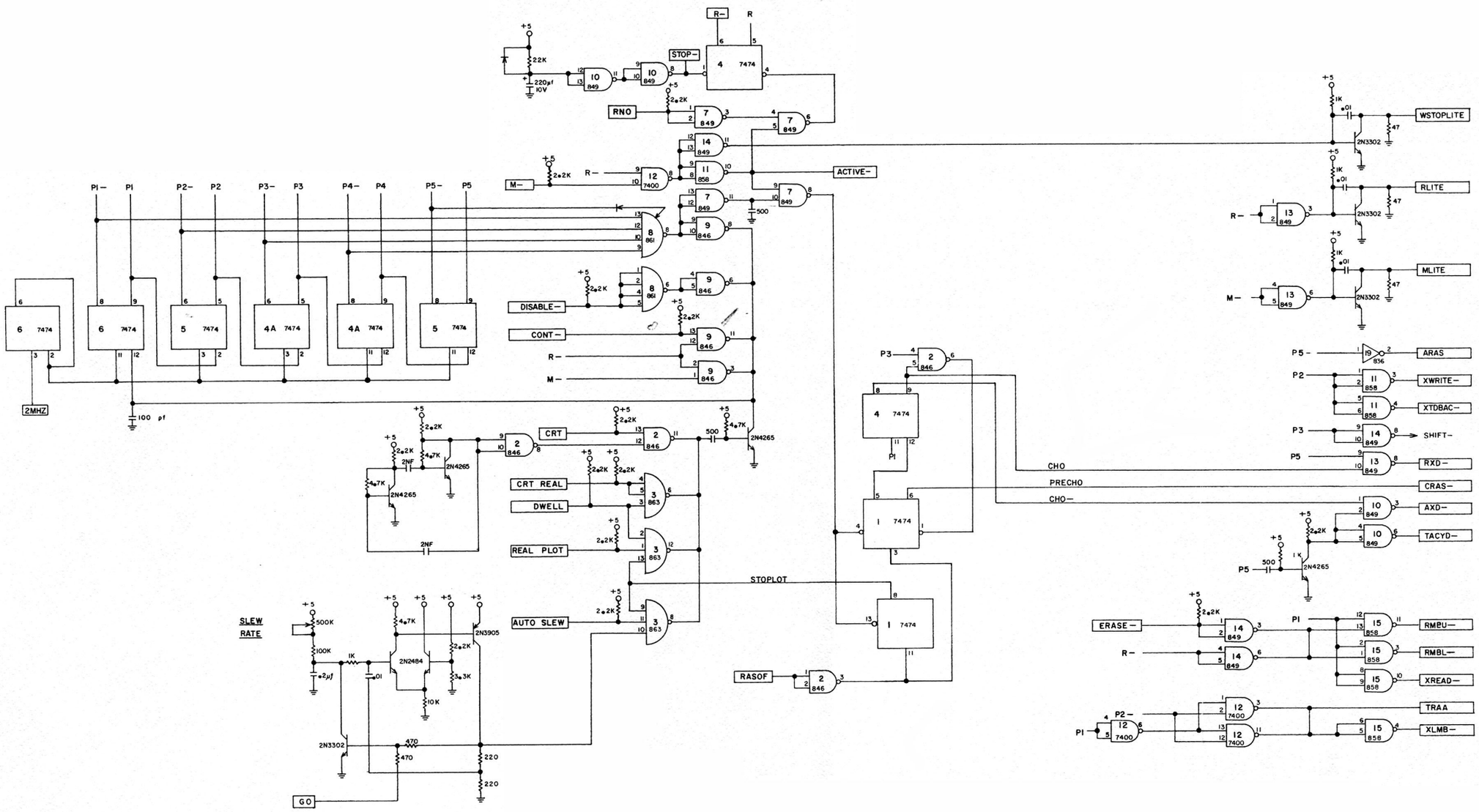

NEXT ASS'Y	USED ON
APPLICATION	

UNLESS OTHERWISE SPECIFIED DIMENSIONS ARE IN INCHES AND TOLERANCES ARE FRACTIONS ± DECIMALS ± ANGLES ±
√ INDICATES SURFACE ROUGHNESS PER MIL-STD-10

MATERIAL
SPEC.
FINISH
SPEC.

REMOVE ALL BURRS
BREAK ALL SHARP CORNERS

		DATE
DRAWN		
CHECKED		
APPROVED		
APPROVED		

NICOLET INSTRUMENT CORPORATION
5225 Verona Road, Madison, Wisconsin 53711

TITLE AUTO ARITHMETIC & CONTROL BOARD
READOUT CONTROL
1080

CODE IDENT. NO.	SIZE	
	D	(BOARD 3)

SCALE | SHEET 1 of 4

REV.

DIST. KEY